PLEASE DELETE THIS LAYER GUIDE BEFORE SAVING

32” x 29” Medium Round Stretch-Fit Table Cover

TAB-32x29-STRETCH-RND-DP

GREEN LINE ——— OVERALL LAYOUT SIZE

RED DOTTED LINE ——— SAFE VIEWABLE ZONE

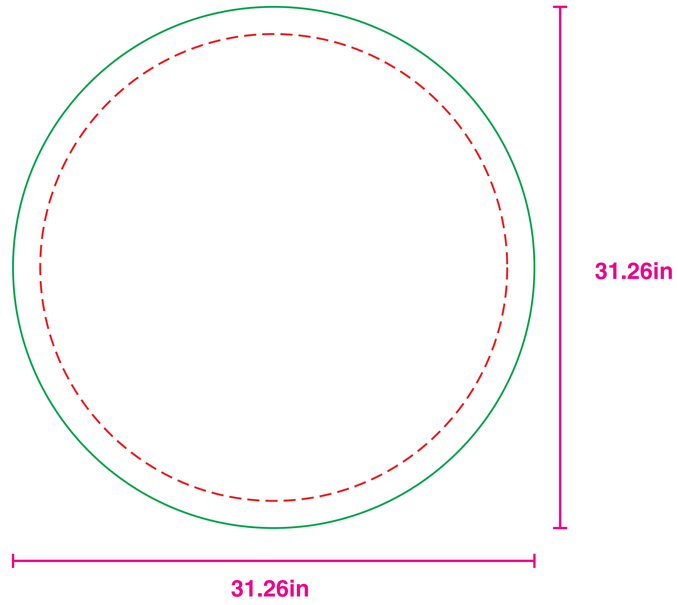

For Designer
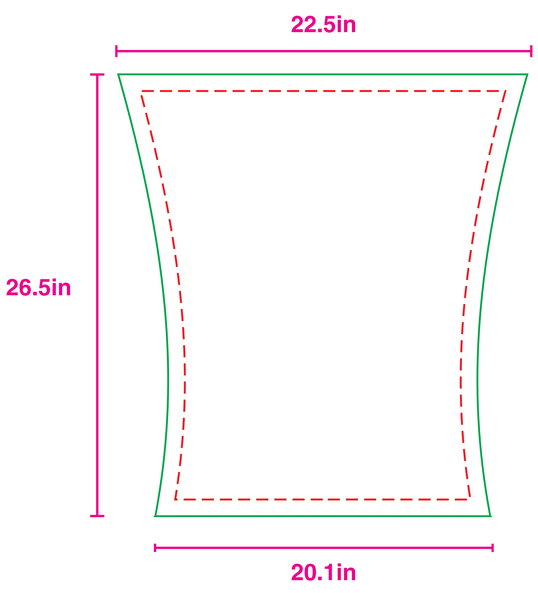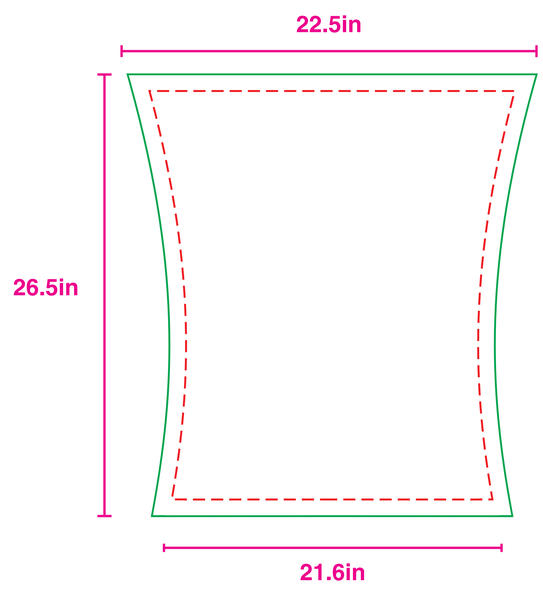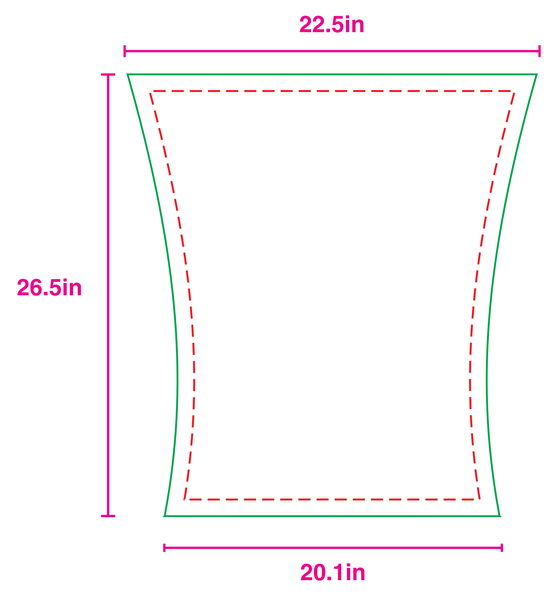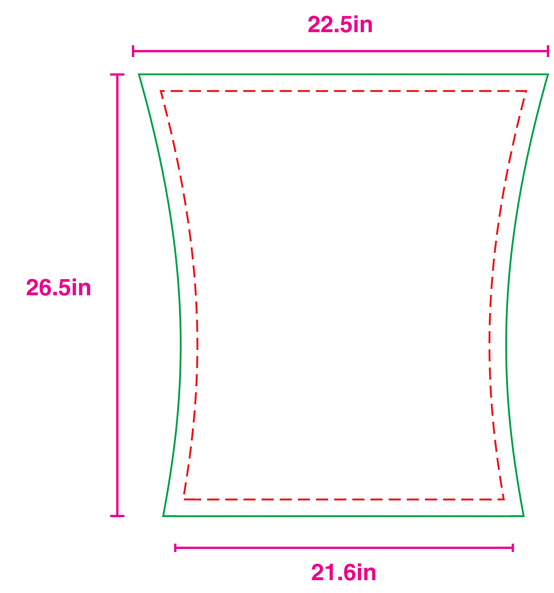
Design at 100% Size
CMYK color Mode
All Panton Colors **MUST** be called out
Embed all images and outline fonts
Accepted File Types:PDF,Ai,JPEG,TIF,EPS